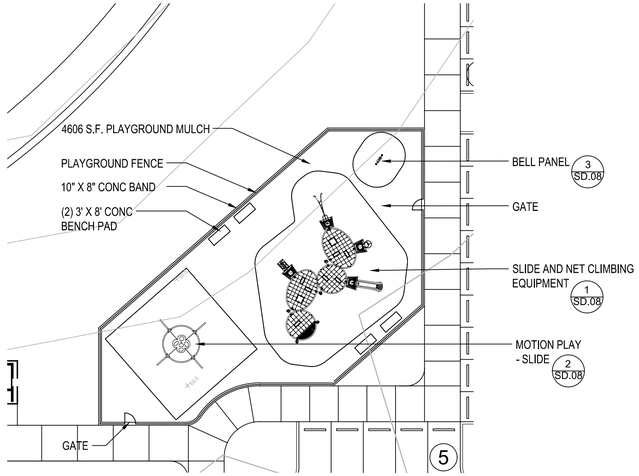

PLAYGROUND (AGE 5-12) LAYOUT

GRAPHIC SCALE NORTH

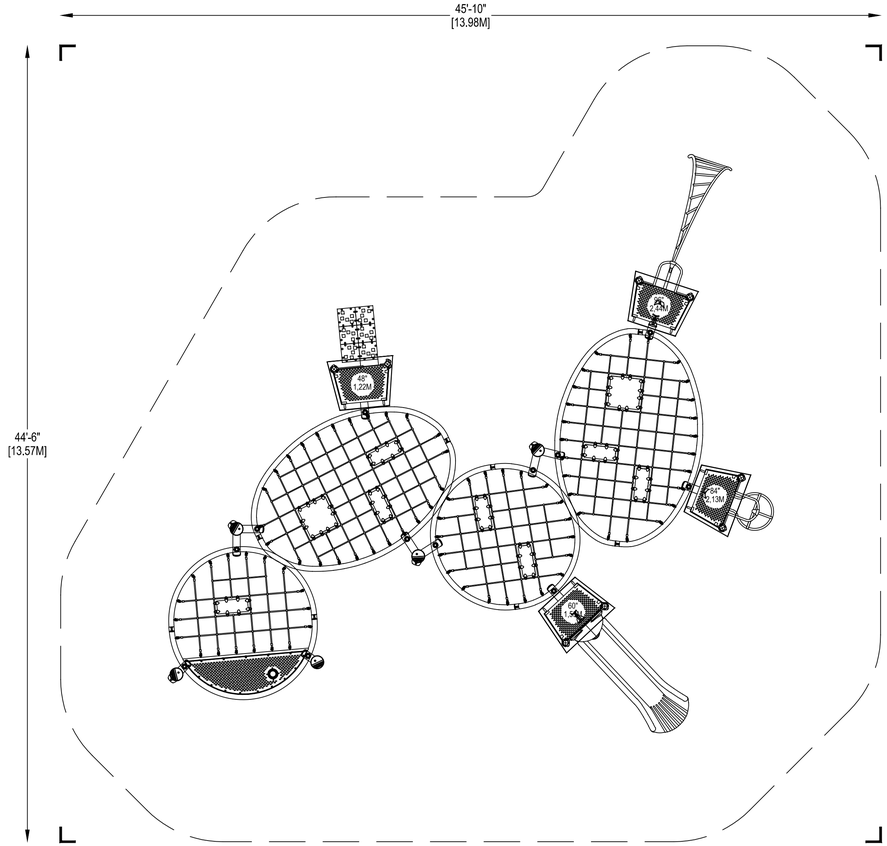

1 SD.08 SLIDE AND NET CLIMBING EQUIPMENT
SCALE: 1/4"=1'-0"

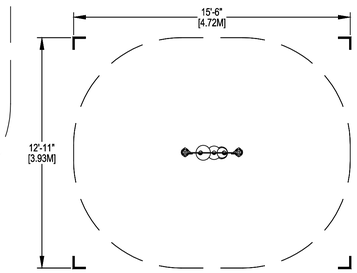

2 SD.08 BELL PANEL
SCALE: 1/4"=1'-0"

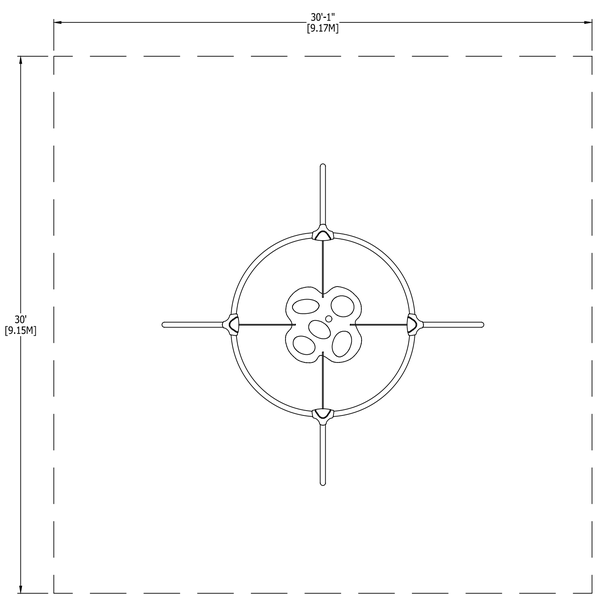

3 SD.08 MOTION PLAY - SLIDE
SCALE: 1/4"=1'-0"

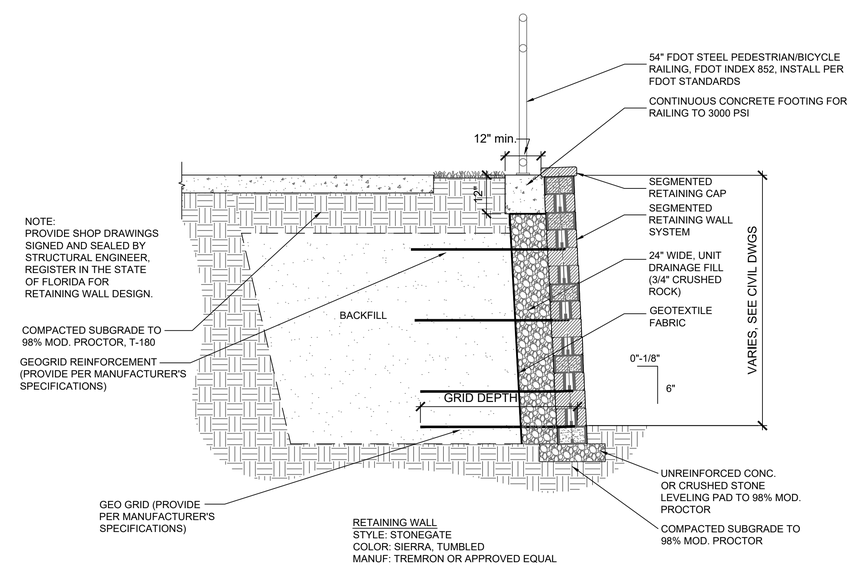

RETAINING WALL
STYLE: STONEGATE
COLOR: SIERRA, TUMBLED
MANUF: TREMRON OR APPROVED EQUAL

4 SD.08 RETAINING WALL
1/2" = 1'-0"

FILE NAME: xr-retaining wall

COMMUNITY SOLUTIONS GROUP
A GAI Consultants, Inc. Service Group
618 E. SOUTH STREET
SUITE 700
ORLANDO, FL 32801
407.423.8398
CERTIFICATE OF AUTHORIZATION: EB9951

PROJECT
EAST LAKE SPORTS AND COMMUNITY COMPLEX
LAKE COUNTY, FLORIDA

CLIENT
LAKE COUNTY PARKS AND TRAILS
2401 WOODLEA ROAD
TAVARES, FL 32778
352.253.4950 tel

OWNER
LAKE COUNTY
315 W. MAIN ST.
TAVARES, FL 32778
325.343.9800 tel

CONSULTANTS

REGISTRATION

ISSUED FOR:

ISSUANCE	DD MMM YY

PROJECT NUMBER	A171295.02
DATE:	10/20/2023
SCALE:	AS SHOWN
DRAWN BY:	RP
CHECKED BY:	FB

DRAWING SCALE AND NORTH ARROW
0 40 Feet
GRAPHIC SCALE NORTH

SHEET TITLE
SITE DETAILS

SHEET NUMBER
SD.08

A GAI CONSULTANTS, INC SERVICE GROUP

Filename: Z:\MPWA\2017\A171295.02 - EAST LAKE PARK PH 2\CAD\PRODUCTION DWGS\3.A171295.02-SD.DWG
Last Modified by: RP
Last Modified Date: 10/20/2023 1:37 PM